Schematic Diagram

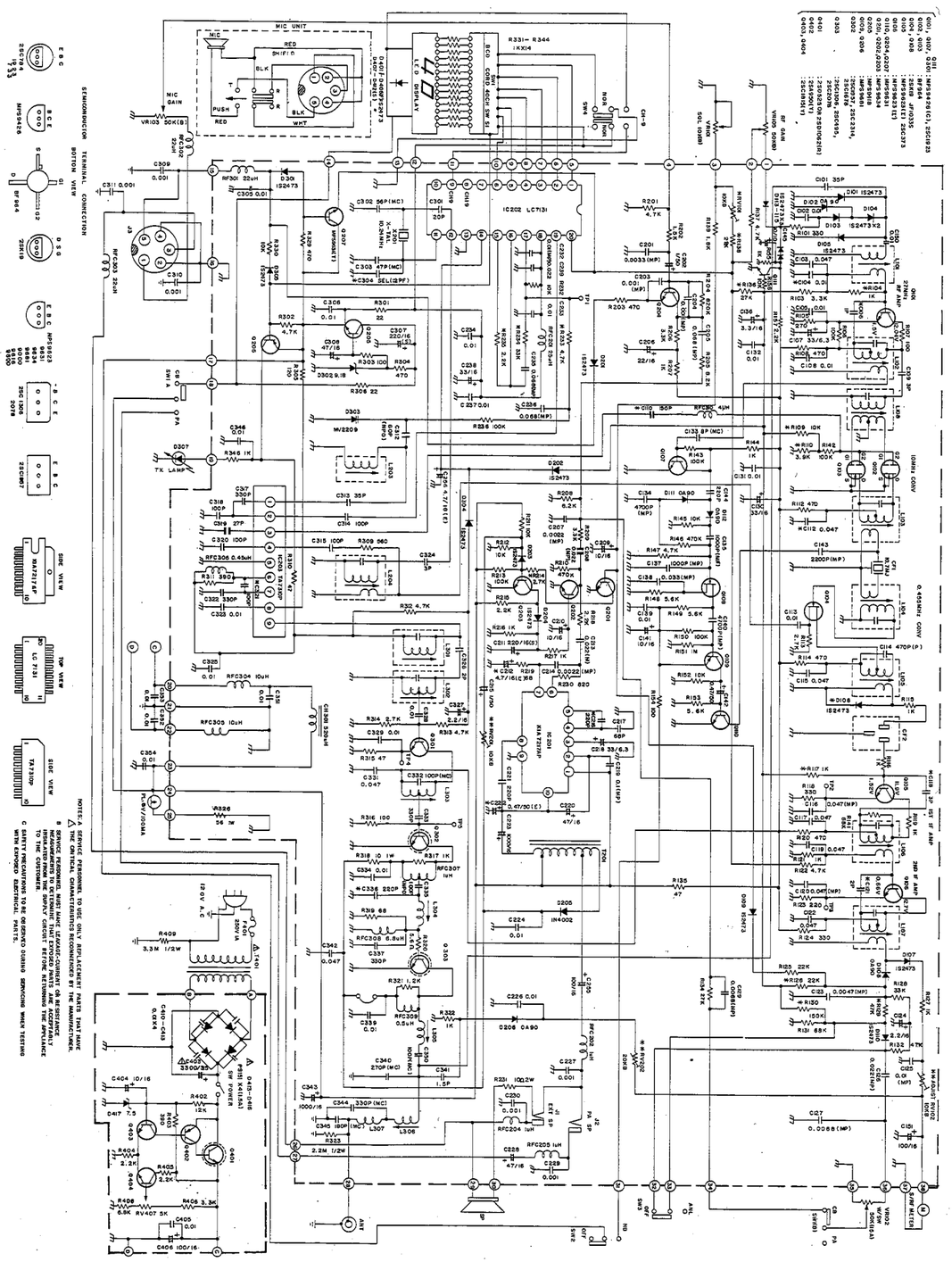
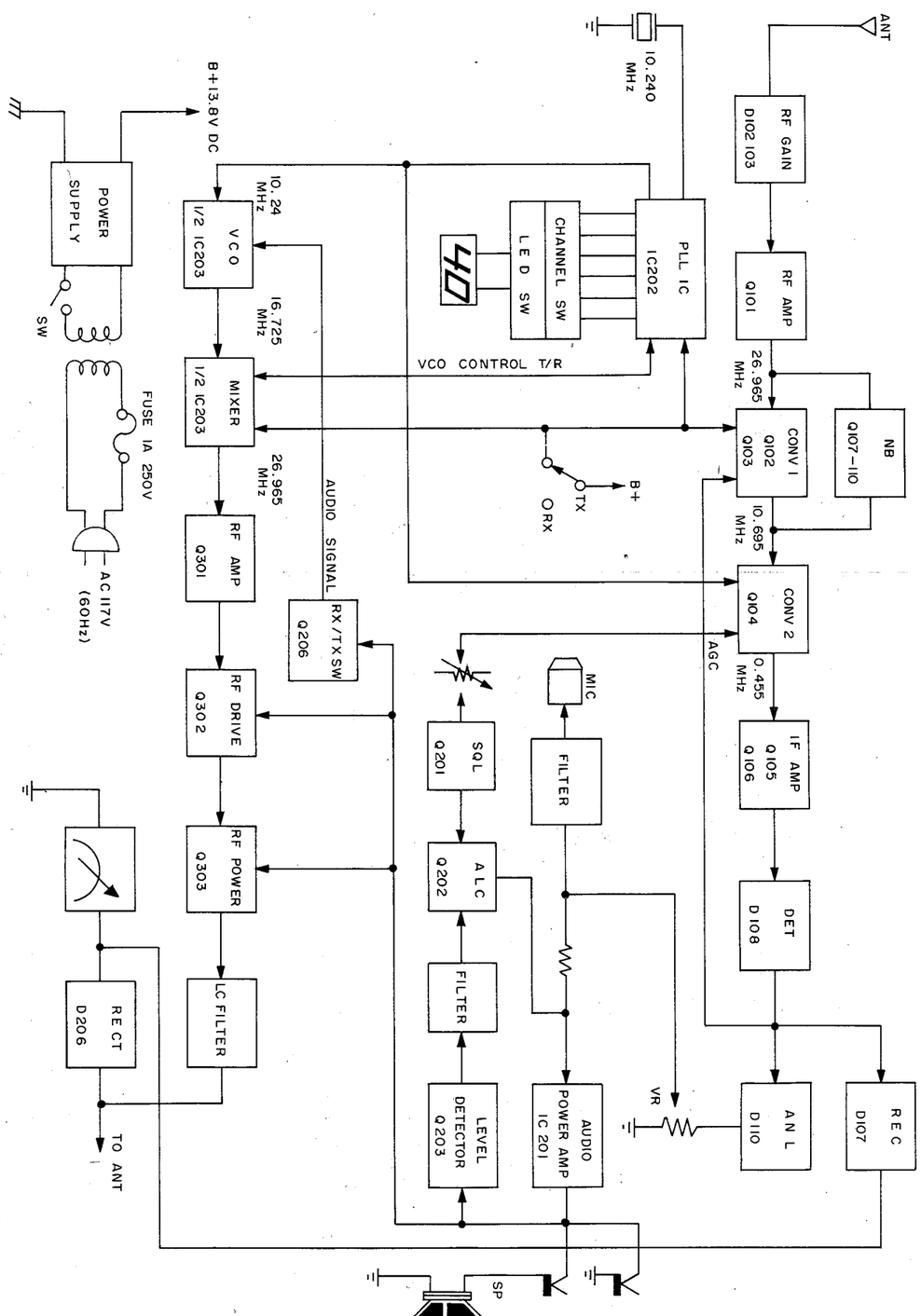
Block Diagram