CIRCUIT DIAGRAM FOR COBRA 89XLR

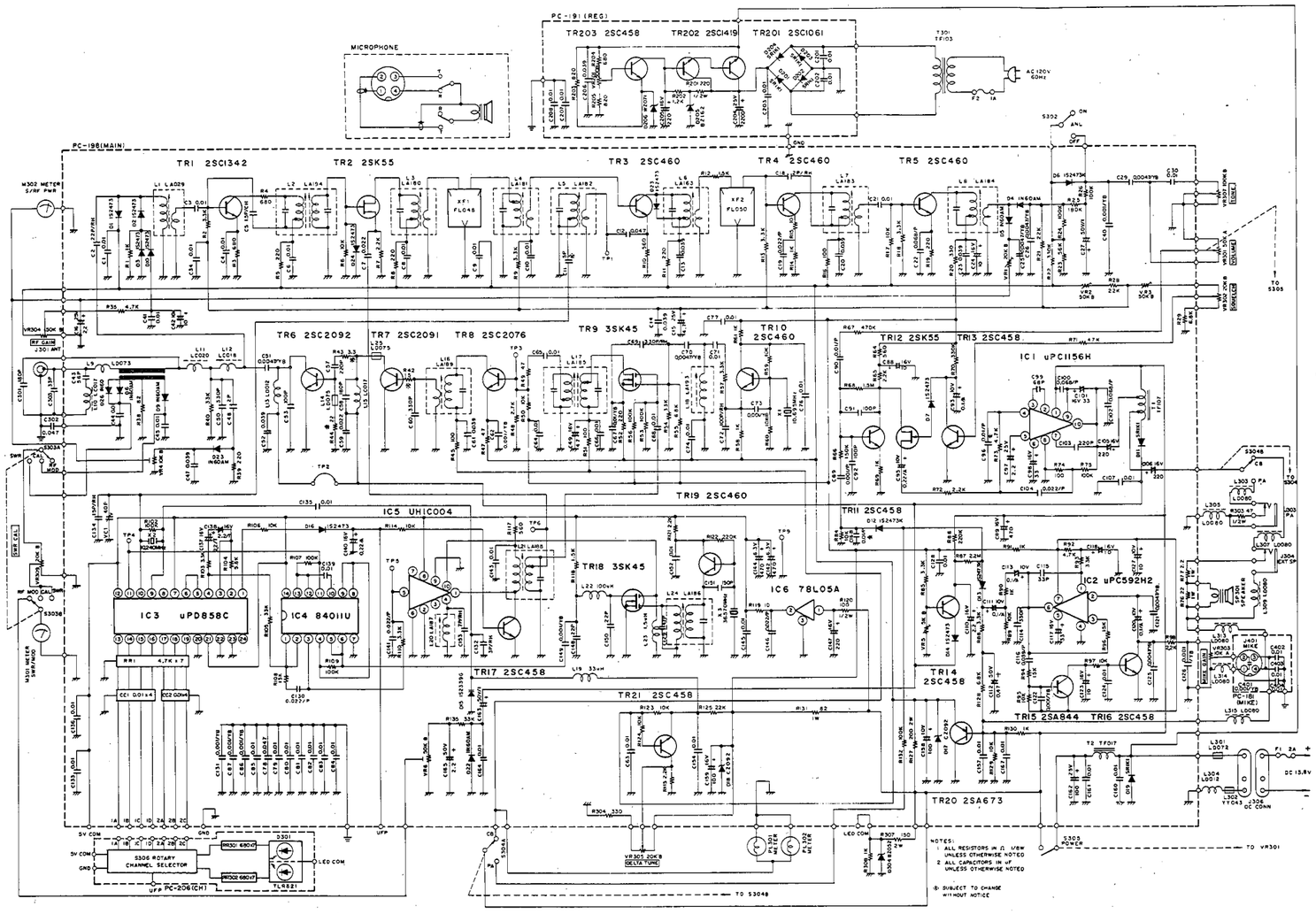

BILL OF MATERIAL FOR COBRA 89XLR

CIRCUIT SYMBOL	DESCRIPTION	DYNASCAN PART NO.
	IC, TRANSISTORS, & DIODES	
IC-3	Integrated Circuit, μPD858C	307-095-9-004
IC-4	Integrated Circuit, MB84011-U	307-113-9-001
IC-5	Integrated Circuit, DE-087	307-113-9-002
IC-1	Integrated Circuit, μPC1156H	307-112-9-001
IC-2	Integrated Circuit, μPC592H2	307-113-9-004
IC-6	Integrated Circuit, NJM78L05A	307-113-9-003
TR-2,12	F.E.T., 2SK55-D	182-045-9-001
TR-9	F.E.T., 3SK45-B	182-038-9-001
TR-18	F.E.T., 3SK45-B09	182-042-9-001
TR-1	Transistor, 2SC1342-B	176-074-9-001
TR-3,4,5,10,19	Transistor, 2SC460-B	176-072-9-005
TR-11,13,14,16, 17,21,203	Transistor, 2SC458-C	176-048-9-002
TR-8	Transistor, 2SC2076-CB	176-060-9-004
TR-7	Transistor, 2SC2091	176-074-9-002
TR-6	Transistor, 2SC2092	176-074-9-003
TR-15	Transistor, 2SA844-C	177-025-9-002
TR-20	Transistor, 2SA673-C	177-025-9-001
TR-201	Transistor, 2SC1061, NDN, Power	172-044-9-001
TR-202	Transistor, 2SC1419-C	176-055-9-004
D-1,2,3,7,10,14, 16,24	Diode, 1S2473 (Forming D type)	151-035-9-001
D-11,19,201,202, 203,204	Diode, SR1K-1	151-040-9-003
D-4,5,8,9,22,23	Diode, 1N60AM (Forming D type)	150-012-9-001
D-6,12,13	Diode, 1S2473-K (Forming D type)	151-066-9-001
D-206	Zenor Diode, WZ-071 (Forming D type)	152-075-9-001
D-17,18	Zenor Diode, CZ-092 (Forming D type)	152-082-9-001
D-205	Zenor Diode, BZ-162 (Forming D type)	152-057-9-001
D-304	Zenor Diode, BZ-052 (Forming D type)	152-082-002
D-15	Varicap Diode, 1S2339-G	029-016-9-001
D-301	Light Emitting Diode, TLR321	158-014-9-001
	COILS & TRANSFORMERS	
L-1	Coil, LA-029	066-017-9-001
L-6	Coil, LA-163	060-022-9-001
L-2	Coil, LA-194	060-024-9-012
L-3	Coil, LA-180	060-024-9-001
L-4	Coil, LA-181	060-024-9-002
L-5	Coil, LA-182	060-024-9-003
L-7	Coil, LA-183	060-024-9-004
L-8	Coil, LA-184	060-024-9-005
L-17	Coil, LA-185	060-024-9-006
L-24	Coil, LA-186	060-024-9-007
L-20	Coil, LA 187	060-024-9-008
L-21	Coil, LA-188	060-024-9-009
L-16	Coil, LA-189	060-024-9-010
L-18	Coil, LA-193	060-024-9-011

CIRCUIT SYMBOL	DESCRIPTION	DYNASCAN PART NO.
	COILS & TRANSFORMERS (Continued)	
L-10,15	Coil, LC-017	044-028-9-004
L-12	Coil, LC-018	041-056-9-003
L-11	Coil, LC-020	044-028-9-005
L-13	Coil, LD-012	044-028-9-003
L-9	Coil, LD-073	044-042-9-002
L-23	Micro Inductor, LZ-002 1.5μ	041-090-9-001
L-19	Micro Inductor, LZ-001 33μ	041-090-9-002
L-22	Micro Inductor, LZ-001 100μ	041-062-9-002
T-2	Choke Transformer, TF-017	044-028-9-006
T-1	Output Transformer, TF-107	061-031-9-001
T-301	Power Transformer, TF-103	065-134-9-001
L-301,302	Beads Core, LD-072	044-042-9-001
L-14	Beads Core, LD-075	763-081-9-001
L-25	Beads Core, LD-078	763-085-9-001
L-303,305,307, 309,313,314,315	Coil, LD-080	044-045-9-001
	VARIABLE RESISTORS	
VR-5	Semi-fixed Resistor, RV-133 5KB	008-308-9-004
VR-4	Semi-fixed Resistor, RV-133 10KB	008-311-9-001
VR-3,6	Semi-fixed Resistor, RV-133 50KB	008-308-9-005
VR-201	Semi-fixed Resistor, RV-133 500B	008-312-9-001
VR-1	Semi-fixed Resistor, RV-133 20KB	008-311-9-002
VR-302	Variable Resistor, RV-049 20KB	008-308-9-001
VR-305	Variable Resistor, RV-064 20KB	008-210-9-004
VR-303	Variable Resistor, RV-055 10KA	008-187-9-002
VR-307	Variable Resistor, RV-048 100KB	008-283-9-001
	Variable Resistor, RV-214 50KB-20KB	008-312-9-002
VR-301	Variable Resistor, RV-197 50KA	008-308-9-003
	RESISTORS	
R-43	Carbon Resistor 3.3 ohm 1/8W J (Forming R type)	002-108-5-339
R-15,44,119	Carbon Resistor 10 ohm 1/8W J (Forming R type)	002-108-5-100
R-42	Carbon Resistor 15 ohm 1/8W J (Forming R type)	002-108-5-150
R-47,49	Carbon Resistor 47 ohm 1/8W J (Forming R type)	002-108-5-470
R-16,45,51,74	Carbon Resistor 100 ohm 1/8W J (Forming R type)	002-108-5-101
R-38	Carbon Resistor 82 ohm 1/8W J (Forming R type)	002-108-5-820
R-5,8,11,19,39,52	Carbon Resistor 220 ohm 1/8W J (Forming R type)	002-108-5-221
R-20,304	Carbon Resistor 330 ohm 1/8W J (Forming R type)	002-108-5-331
R-10,64,117	Carbon Resistor 560 ohm 1/8W J (Forming R type)	002-108-5-561
R-3,4,103,204	Carbon Resistor 680 ohm 1/8W J (Forming R type)	002-108-5-681
R-203,205	Carbon Resistor 820 ohm 1/8W J (Forming R type)	002-108-5-821
R-1,14,58,61,69,90, 91,130,308	Carbon Resistor 1K ohm 1/8W J (Forming R type)	002-108-5-102
R-202	Carbon Resistor 1.2K ohm 1/8W J (Forming R type)	002-108-5-122
R-12,118	Carbon Resistor 1.5K ohm 1/8W J (Forming R type)	002-108-5-152
R-7,65,98,115,127	Carbon Resistor 2.2K ohm 1/8W J (Forming R type)	002-108-5-222
R-48	Carbon Resistor 2.7K ohm 1/8W J (Forming R type)	002-108-5-222
R-2,9,13,18,57,85, 88,110	Carbon Resistor 3.3K ohm 1/8W J (Forming R type)	002-108-5-332
R-35,72,73,92	Carbon Resistor 4.7K ohm 1/8W J (Forming R type)	002-108-5-472
R-104	Carbon Resistor 5.6K ohm 1/8W J (Forming R type)	002-108-5-562
R-29,128	Carbon Resistor 6.8K ohm 1/8W J (Forming R type)	002-108-5-689

CIRCUIT SYMBOL	DESCRIPTION	DYNASCAN PART NO.
	RESISTORS (Continued)	
R-6,17,50,59,84, 89,95,97,105, 106,114,123, 124,129	Carbon Resistor 10K ohm 1/8W J (Forming R type)	002-108-5-103
R-94,96	Carbon Resistor 15K ohm 1/8W J (Forming R type)	002-108-5-153
R-21,28,108,125	Carbon Resistor 22K ohm 1/8W J (Forming R type)	002-108-5-223
R-40-54,93,135	Carbon Resistor 33K ohm 1/8W J (Forming R type)	002-108-5-333
R-71	Carbon Resistor 47K ohm 1/8W J (Forming R type)	002-108-5-473
R-23	Carbon Resistor 56K ohm 1/8W J (Forming R type)	002-108-5-563
R-55	Carbon Resistor 68K ohm 1/8W J (Forming R type)	002-108-5-683
R-24,26,53,56, 75,102,107,109,132	Carbon Resistor 100K ohm 1/8W J (Forming R type)	002-108-5-104
R-66	Carbon Resistor 150K ohm 1/8W J (Forming R type)	002-108-5-154
R-25	Carbon Resistor 180K ohm 1/8W J (Forming R type)	002-108-5-184
R-86,122	Carbon Resistor 220K ohm 1/8W J (Forming R type)	002-108-5-224
R-22,70	Carbon Resistor 330K ohm 1/8W J (Forming R type)	002-108-5-334
R-67	Carbon Resistor 470K ohm 1/8W J (Forming R type)	002-108-5-474
R-68	Carbon Resistor 1.5M ohm 1/8W J (Forming R type)	002-108-5-155
R-87	Carbon Resistor 2.2M ohm 1/8W J (Forming R type)	002-108-5-225
R-60	Carbon Resistor 10K ohm 1/4W J (U type)	002-104-5-103
R-303	Carbon Resistor 47 ohm 1/2W J (P type)	002-102-5-470
R-120	Carbon Resistor 100 ohm 1/2W J (P type)	002-102-5-101
R-201	Carbon Resistor 220 ohm 1/2W J (P type)	002-102-5-221
R-77	Metalized Resistor 2.2 ohm 1W K	013-011-9-001
R-76	Metalized Resistor 22 ohm 1W K	013-011-9-002
R-131	Metalized Resistor 82 ohm 1W K	013-015-9-001
R-307	Metalized Resistor 150 ohm 2W K	013-019-9-001
R-127	Metalized Resistor 200 ohm 2W K	013-015-9-002
RR-301,302	Composite Parts HA-008	527-076-9-002
RR-1	Composite Parts HA-006	527-076-9-001
	CAPACITORS	
C-112	Electrolytic Condenser 0.47μ 50V	022-122-9-016
C-27,163	Electrolytic Condenser 1μ 50V	022-144-9-001
C-165	Electrolytic Condenser 2.2μ 50V	022-156-9-001
C-16,97	Electrolytic Condenser 2.2μ 25V	022-153-9-001
C-15	Electrolytic Condenser 47μ 25V	022-122-9-003
C-162	Electrolytic Condenser 100μ 25V	022-155-9-002
C-204	Electrolytic Condenser 2200μ 25V	022-156-9-002
C-110	Electrolytic Condenser 2.2μ 16V	022-156-9-003
C-24,42,88,118,123	Electrolytic Condenser 10μ 16V	022-142-9-001
C-98,101,117	Electrolytic Condenser 33μ 16V	022-144-9-004
C-49	Electrolytic Condenser 47μ 16V	022-156-9-004
C-159	Electrolytic Condenser 100μ 16V	022-099-9-005
C-105,106,147,205	Electrolytic Condenser 220μ 16V	022-122-9-008
C-119	Electrolytic Condenser 470μ 16V	022-099-9-006
C-127	Electrolytic Condenser 10μ 10V	022-156-9-005
C-158	Electrolytic Condenser 100μ 10V	022-099-9-004
C-142,144	Electrolytic Condenser 470μ 6.3V	022-122-9-014
C-137,138	Tantal Condenser 2.2μ 16V M	027-024-9-001
C-93,111,113,120	Aluminum Condenser 0.1μ 10V M	033-029-9-001
C-95,140	Aluminum Condenser 0.22 10V M	033-029-9-002
C-89,90	Mylar Condenser 0.001μ 50V K	025-074-9-003
C-96	Mylar Condenser 0.01μ 50V K	025-087-9-001
C-19,104,141,146	Mylar Condenser 0.022μ 50V K	025-071-9-002
C-116	Mylar Condenser 0.039μ 50V K	025-099-9-001

CIRCUIT SYMBOL	DESCRIPTION	DYNASCAN PART NO.
	CAPACITORS (Continued)	
C-22,100,102	Mylar Condenser 0.068μ 50V K	025-060-9-002
C-25,26,29,51 70,121,125	Ceramic Condenser 0.0047μ 25V Z YB	020-178-9-018
C-5	Ceramic Condenser 1.5P 50V C CH	020-178-9-001
C-132	Ceramic Condenser 3P 50V C RH	020-109-9-003
C-18	Ceramic Condenser 2P 50V C RH	020-176-9-003
C-153	Ceramic Condenser 7P 50V C RH	020-179-9-001
C-134	Ceramic Condenser 15P 50V J RH	020-176-9-005
C-43	Ceramic Condenser 56P 50V J RH	020-176-9-007
C-69	Ceramic Condenser 330P 50V J RH	020-176-9-009
C-2	Ceramic Condenser 22P 50V J RH	020-176-9-006
C-129	Ceramic Condenser 47P 50V J RH	020-178-9-004
C-72	Ceramic Condenser 100P 50V J RH	020-178-9-005
C-11	Ceramic Condenser 5P 50V C SL	020-109-9-010
C-148,150	Ceramic Condenser 22P 50V K SL	020-097-9-006
C-115,303	Ceramic Condenser 33P 50V K SL	020-125-9-001
C-103	Ceramic Condenser 68P 50V K SL	020-148-9-001
C-48	Ceramic Condenser 2P 50V K SL	020-176-9-003
C-53,72,91,92	Ceramic Condenser 100P 50V K SL	020-109-9-008
C-151	Ceramic Condenser 150P 50V K SL	020-179-9-002
C-58,301	Ceramic Condenser 180P 50V K SL	020-179-9-003
C-57,99	Ceramic Condenser 220P 50V K SL	020-109-9-013
C50,60,114	Ceramic Condenser 330P 50V K SL	020-176-9-011
C-28,40,73,86,87, 122,126,131,149 401	Ceramic Condenser 0.001μ 25V Z YB	020-178-9-017
C-1,3,4,6,8,9, 10,21,30,34,41,44, 45,62,63,64,65,66, 68,71,74,76,77,79, 80,81,82,83,84,107, 124,128,85,133,135, 136,139,143,145,152, 154,157,160,161,164, 167,201,202,203,207, 208,402,403,404	Ceramic Condenser 0.01μ 25V Z YG	020-165-9-004
C-7,59,67	Ceramic Condenser 0.022μ 25V Z YG	020-179-9-004
C-13,14,20,23, 47,52,61,206	Ceramic Condenser 0.039μ 25V Z YG	020-178-9-022
C-12,78,302	Ceramic Condenser 0.047μ 25V Z YG	020-178-9-022
VC-1	Trimmer Condenser CV-024 40P	028-046-9-001
CC-1,2,	Composite Parts HA-003	527-076-9-003
	CRYSTALS	
X-2	Crystal, QX-077 10.240MHz	133-014-9-001
X-1	Crystal, QX-078 10.695MHz	133-014-9-002
X-3	Crystal, QX-079 36.570MHz	133-014-9-003
	MISCELLANEOUS	
XF-1	Ceramic Filter, FL-047	140-018-9-001
XF-2	Ceramic Filter, FL-049	140-018-9-002
S-306	Rotary Switch, SR-151	083-223-9-001
S-302,304A-B	Slide Switch, SW-048	084-055-9-001
S-303A-B	Slide Switch, SW-049	084-058-9-001
	Cap Connector, YY-008	763-085-9-002

CIRCUIT SYMBOL	DESCRIPTION	DYNASCAN PART NO.
	MISCELLANEOUS (Continued)	
PL-301,302	Pilot Lamp, PL-005	401-020-9-001
SP-301	Speaker, SP-014	580-015-9-001
M-301	Meter, MT-083	320-088-9-001
M-302	Meter, MT-085	320-089-9-001
	Microphone, MK-057	562-018-9-001
J-301	M type Jack, JK-035	773-080-9-001
J-401	Jack for Microphone, JK-058	773-073-9-001
J-306	3 F Consent	762-020-9-001
J-303,304	Jack for PA, JK-010	772-025-9-001
	Insulation Sheet for TR 2SC2091	345-050-9-001
	Insulation Sheet for TR 2SC2092 2SC1061	345-050-9-002
	Insulation Sheet for IC μPC1156H	345-050-9-003
F-1	Flat Cable, WF-007	426-022-9-001
T-1,3,4,5,6,9	Test Terminal, TP-029	757-033-9-001
	Fuse Holder, FH-009	742-025-9-001
F-2	Fuse, FS-001 1A	191-251-3-001
F-1	Fuse, FS-001 2A	191-251-3-002
	Wire Clamp, YY-047	380-278-9-001
	Lead Clamp, YY-048	380-284-9-001
	Lead Clamp, YY-049	380-284-9-002
	AC Power Cord, WZ-001	420-001-9-009
	DC Power Cord WD-070088	427-022-9-001
	Chassis	257-092-9-001
	Back Panel	262-017-9-001
	Bonnet	253-057-9-001
	Bottom Metal Board	252-022-9-001
	Switch Holder	251-206-9-001
	Panel Holder (right)	251-207-9-001
	Panel Holder (left)	251-208-9-001
	Holder for Power Transformer	251-173-9-003
	Lamp Holder	251-209-9-001
	Lamp Bracket	251-173-9-002
	Heat Sink for Integrated Circuit	747-052-9-001
	Heat Sink for Power Transistor	747-052-9-002
	Microphone Hanger	741-074-9-001
	Shield Board	763-082-9-001
	Front Panel	255-151-9-001
	Knob Vol	751-005-9-002
	Knob for SWR/CAL	751-147-9-001
	Knob for RF Gain	751-147-9-002
	Channel Knob	751-147-9-003
	Control Plate	260-113-9-001
	Brand Plate	260-113-9-002
	FCC Plate	260-113-9-003
	Transmitter Card	492-044-9-001
	Serial No. Label	– NA –
	Production No. Seal	– NA –
	Warning Label	484-035-9-001
	Digital Window Seal	763-085-9-003
	Insulation Board	342-040-9-001

DESCRIPTION	DYNASCAN PART NO.
MISCELLANEOUS (Continued)	
Speaker Net	763-085-9-004
Rubber Washer	347-072-9-001
Wool Tac 91 mm W x 13 mm L	769-086-9-001
Wool Tac 190 mm W x 10 mm L	769-096-9-001
Wool Tac 330 mm W x 10 mm L	769-096-9-002
Meter Cushion	769-096-9-003
Chobert Rivet	733-023-9-001
Rubber Foot	381-079-9-001
Cord Stopper	380-267-9-001
Spring for SWR/CAL Knob	763-084-9-003
Spring for RF Gain Knob	763-085-9-005
Spring for Channel Knob	763-084-9-004
Lug Terminal	345-052-9-001
Bind Screw M2x4 Ni PBH NPL Mach. Sc	634-069-9-002
Bind Screw M2.6 x 4 Ni PBH NPL Mach. Screw	634-073-9-001
+Bind Screw M3x6 Ni PBH NPL Mach. Screw	634-053-9-001
+Bind Screw M4x10 Ni PBH NPL Mach. Screw	634-084-9-001
+Bind Screw M5x10 Ni PBH NPL Mach. Screw	634-077-9-002
+Bind Screw M3x6 PBH Mach. Screw	634-084-9-002
Bind Tap Tight M3x6 Ni + PBH	710-021-9-004
Bind Tap Tight M3x14 Ni + PBH	710-032-9-001
Bind Tapping Screw 3φ x 8	710-032-9-002
Bind Tapping Screw 3φ x 10	710-019-9-001
Tapping 3.5φ x 8 ZMC PBH SM Chromated (Type BT)	710-021-9-001
Nut M4 with Celede ZMC Hex	653-037-9-001
Spring Nut 3φ	653-024-9-002
Plain Washer 3φ	724-021-9-001
Rugged Washer 3.5φ	731-041-9-001
Styrofoam Box (left)	503-130-9-001
Styrofoam Box (right)	503-130-9-002
Display Box	500-310-9-001
Double Carton	500-311-9-001
Instruction Manual	480-197-9-001
Composite consisting of Schematic parts list	499-103-9-001
Service Station Card	492-042-0-000
FCC License Application Form	492-041-9-001
FCC Temporary License Form	492-046-9-001
Warranty Card	491-138-9-001
Part 95 of the Commissions Rules	492-047-9-001
Switch Stopper	763-085-9-006
Special Information Sheet-Sana's Requirement	496-110-9-001
Printed Circuit Board PC-198-AA	302-238-9-001
Flexible PC Board PC-206AA	302-241-9-001
PC Board for AC power supply PC-191AA	302-242-9-001
PC Board for Microphone PC-181AA	302-239-9-001

Printed in Japan