# CIRCUIT DIAGRAM FOR COBRA 19

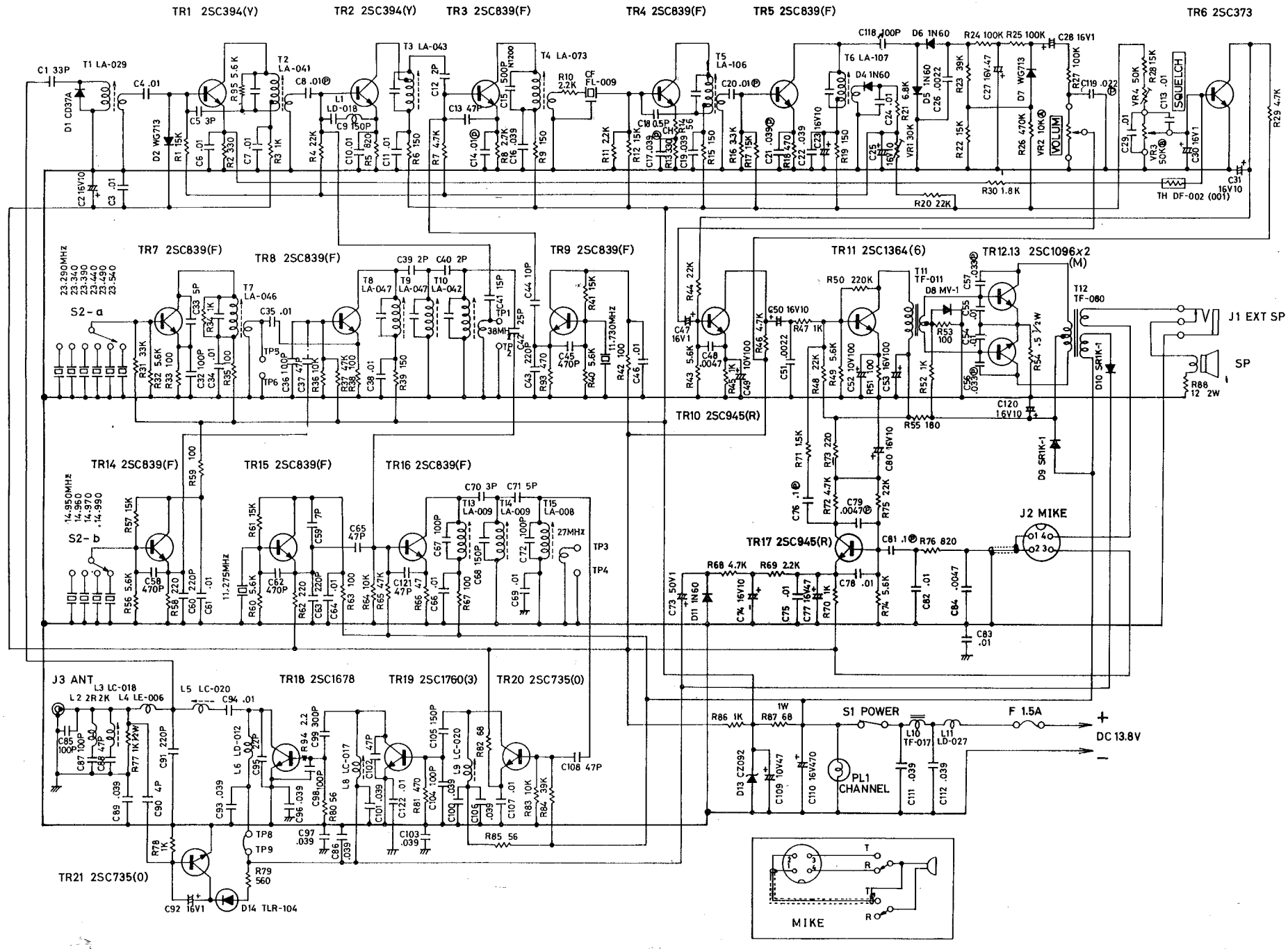

# BILLS OF MATERIAL FOR COBRA 19

## TRANSISTORS & DIODES

| CIRCUIT SYMBOL | DESCRIPTION | PARTS NO |
|---|---|---|
| TR 1,2 | Transistor 2SC394 (Y) | 176-042-9-001 |
| TR-3 4 5,7,8,9 14 15,16 | Transistor 2SC839 (F) | 176-042-9-002 |
| TR-6 | Transistor 2SC373 | 176-025-9-001 |
| TR-10,17 | Transistor 2SC945(R) | 176-042-9-003 |
| TR 11 | Transistor 2SC1364-6 | 176-054-9-001 |
| TR-12,13 | Transistor 2SC1096(M) w/ Z type fin | 172-024-9-004 |
| TR-18 | Transistor 2SC1678 | 172-028-9-001 |
| TR-19 | Transistor 2SC1760-3 | 172-028-9-002 |
| TR-20 21 | Transistor 2SC735(O) | 176-042-9-006 |
| D-1 | Diode CD37A | 151-040-9-001 |
| D-2 7 | Diode WG-713 | 151-049-9-001 |
| D-4,5,6 11 | Diode IN60 | 150-001-9-005 |
| D-8 | Varistor MV-1 | 151-049-9-002 |
| D-9 10 | Diode SR1K-1 | 151-040-9-003 |
| D-13 | Zenor Diode CZ-092 | 152-051-9-001 |
| D-14 | L E D TLR-104 | 158-008-9-001 |
| TH | Thermistor DF-002(001) | 013-006-9-001 |

## COILS & TRANSFORMERS

| CIRCUIT SYMBOL | DESCRIPTION | PARTS NO |
|---|---|---|
| T-1 | Coil LA-029 | 066-020-9-001 |
| T-2 | Coil LA-041 | 066-020-9-002 |
| T-3 | Coil LA-043 | 066-020-9-003 |
| T-4 | Coil LA-073 | 060-019-9-001 |
| T 5 | Coil LA-106 | 060-019-9-002 |
| T 6 | Coil LA-107 | 060-019-9-003 |
| T-7 | Coil LA-046 | 066-020-9-004 |
| T-8 9 | Coil LA-047 | 066-020-9-005 |
| T-10 | Coil LA-042 | 066-020-9-006 |
| T 11 | Transformer TF-011 or TF-069 | 061-026-9-001 |
| T-12 | Transformer TF-080 or TF-082 | 061-026-9-002 |
| T-13,14 | Coil LA-009 | 066-020-9-007 |
| T-15 | Coil LA-008 | 066-020-9-008 |
| L-1 | Coil LD-018 or LD-032 | 041-069-9-001 |
| L-2 | Micro Inductor 7BA-144LY-2R2K | 041-069-9-002 |
| L-3 | Coil LC-018 or LC-072 | 044-033-9-001 |
| L-4 | Coil LE-006 or LE-031 | 041-069-9-003 |
| L-5 9 | Coil LC-020 or LC-074 | 044-033-9-002 |
| L-6 | Coil LD-012 or LD-033 | 041-069-9-004 |
| L-8 | Coil LC-017 or LC-071 | 044-033-9-003 |
| L-10 | Transformer TF-017 or TF-083 | 042-014-9-001 |
| L-11 | Coil LD-027 or LD-031 | 041-069-9-005 |
| CF | Ceramic Filter FL-009 or FL-019 | 140-011-9-001 |

## CAPACITORS

| CIRCUIT SYMBOL | DESCRIPTION | PARTS NO |
|---|---|---|
| C 18 | Capacitor Ceramic 0 5pF 50V CH | 020-143-9-005 |
| C-12,39 40 | Capacitor Ceramic 2pF 50V SL | 020-143-9-003 |
| C 5 70 | Capacitor Ceramic 3pF 50V SL | 020-143-9-002 |
| C 90 | Capacitor Ceramic 4pF 50V SL | 020-143-9-008 |
| C 33 71 | Capacitor Ceramic 5pF 50V SL | |
| C-59 | Capacitor Ceramic 7pF 50V SL | 020-143-9-007 |
| C-44 | Capacitor Ceramic 10pF 50V K SL | |
| C-41 | Capacitor Ceramic 15pF 50V K SL | |
| C-95 | Capacitor Ceramic 22pF 50V K SL | |
| C-42 | Capacitor Ceramic 25pF 50V K SL | |
| C-1 | Capacitor Ceramic 33pF 50V K SL | 020-143-9-001 |
| C-13,37 65,88,102, 108 121 | Capacitor Ceramic 47pF 50V K SL | |
| C-32 36 67 72 85, 87 98,104,118 | Capacitor Ceramic 100pF 50V K SL | |
| C-9 68,105 | Capacitor Ceramic 150pF 50V K SL | |
| C-43,60 63 91 | Capacitor Ceramic 220pF 50V K SL | |
| C-99 | Capacitor Ceramic 300pF 50V K SL | |
| C-45,58,62 | Capacitor Ceramic 470pF 50V K SL | |
| C-15 | Capacitor Ceramic 500pF 50V K N1200 | |
| C-27 | Capacitor Electrolytic 0 47μF 16V P | 022-122-9-002 |
| C-28 30,47,92 | Capacitor Electrolytic 1μF 16V P | 022-127-9-003 |
| C-73 | Capacitor Electrolytic 1μF 50V P | 022-127-9-006 |
| C-2,23,25,31 50 74 80 120 | Capacitor Electrolytic 10μF 16V P | 022-127-9-001 |
| C 109 | Capacitor Electrolytic 47μF 10V P | 022-127-9-008 |
| C-77 | Capacitor Electrolytic 47μF 16V P | 022-127-9-007 |
| C-52,49 | Capacitor Electrolytic 100μF 10V P | 022-127-9-004 |
| C 53 | Capacitor Electrolytic 100μF 16V P | 022-127-9-005 |
| C 110 | Capacitor Electrolytic 470μF 16V P | 022-127-9-009 |
| C-26,51 | Capacitor Ceramic 0 0022μF 25V Z | |
| C-48,84 | Capacitor Ceramic 0 0047μF 25V Z | 020-143-9-006 |
| C-3,4,6,7 10,11,24, 29 34,35 38 46, 54,55 61 64 66,69 75,78,82,83,94, 107,113 122 | Capacitor Ceramic 0 01μF 25V Z | |
| C-16,19 22,86,89, 93 96,97,101,103, 106,111,112,100 | Capacitor Ceramic 0.039μF 25V Z | 020-143-9-005 |
| C-79 | Capacitor Mylar 0 0047μF 50V K | 025-099-9-002 |
| C-8 14 20 | Capacitor Mylar 0 01μF 50V K | |
| C-56,57 | Capacitor Mylar 0 033μF 50V K | |
| C-17,21 | Capacitor Mylar 0 039μF 50V K | 025-099-9-001 |
| C-76,81 | Capacitor Mylar 0 1μF 50V K | |
| C 119 | Capacitor Mylar 0 02μF 50V K | 025-099-9-003 |

## RESISTORS

| CIRCUIT SYMBOL | DESCRIPTION | PARTS NO |
|---|---|---|
| R-87 | Resistor Solid 68 ohm 1W K | 013-006-9-004 |
| R-77 | Resistor Solid 1K ohm 1/2W K | 013-006-9-003 |
| R-9 | Resistor P Carbon 150 ohm 1/4W J | |
| R-4,44 | Resistor P Carbon 22K ohm 1/4W J | |
| R-94 | Resistor P Carbon 2.2 ohm 1/4W J | |
| R-82 | Resistor P Carbon 68 ohm 1/4W J | |
| R-54 | Resistor Metal 0.5 ohm 1/2W K | 013-006-9-002 |
| R-88 | Resistor Metal 12 ohm 2W K | 013-006-9-005 |
| R-66 | Resistor U Carbon 47 ohm 1/4W J | |
| R-14,80,85 | Resistor U Carbon 56 ohm 1/4W J | |
| R-33 35,38 42,51, 53 63,67,59 | Resistor U Carbon 100 ohm 1/4W J | |
| R-6,15,19 39 | Resistor U Carbon 150 ohm 1/4W J | |
| R-55 | Resistor U Carbon 180 ohm 1/4W J | |
| R-58,62,73 | Resistor U Carbon 220 ohm 1/4W J | |
| R-2,13 | Resistor U Carbon 330 ohm 1/4W J | |
| R-18,81,93 | Resistor U Carbon 470 ohm 1/4W J | |
| R-79 | Resistor U Carbon 560 ohm 1/4W J | |
| R-5,76 | Resistor U Carbon 820 ohm 1/4W J | |
| R-3,34,45,47,52, 70,78,86 | Resistor U Carbon 1K ohm 1/4W J | |
| R-71 | Resistor U Carbon 1.5K ohm 1/4W J | |
| R-30 | Resistor U Carbon 1.8K ohm 1/4W J | |
| R-10,11 69 | Resistor U Carbon 2.2K ohm 1/4W J | |
| R-8 | Resistor U Carbon 2 7K ohm 1/4W J | |
| R-16 | Resistor U Carbon 3 3K ohm 1/4W J | |
| R 7,29,46,68,72 | Resistor U Carbon 4 7K ohm 1/4W J | |
| R-32 40,43,49,56, 60 74,95 | Resistor U Carbon 5.6K ohm 1/4W J | |
| R-21 | Resistor U Carbon 6.8K ohm 1/4W J | |
| R-36,64,83 | Resistor U Carbon 10K ohm 1/4W J | |
| R-1,12 17,22,41, 28,57,61 | Resistor U Carbon 15K ohm 1/4W J | |
| R-20,48,75 | Resistor U Carbon 22K ohm 1/4W J | |
| R-31 | Resistor U Carbon 33K ohm 1/4W J | |
| R-23,84 | Resistor U Carbon 39K ohm 1/4W J | |
| R 37 65 | Resistor U Carbon 47K ohm 1/4W J | |
| R-24 25 27 | Resistor U Carbon 100K ohm 1/4W J | |
| R-50 | Resistor U Carbon 220K ohm 1/4W J | |
| R-26 | Resistor U Carbon 470K ohm 1/4W J | |

## VARIABLE RESISTORS

| CIRCUIT SYMBOL | DESCRIPTION | PARTS NO |
|---|---|---|
| VR-1 | Semi-fixed Resistor RV-103 30K ohm | 008-227-9-001 |
| VR-4 | Semi-fixed Resistor RV-103 50K ohm | 008-227-9-004 |
| VR-2 S-1 | Variable Resistor RV-027 | 008-227-9-002 |
| VR-3 | Variable Resistor VR-071 | 008-227-9-003 |
| S-2 | Rotary Switch SR-078 | 083-182-9-001 |

## CRYSTALS

| CIRCUIT SYMBOL | DESCRIPTION | PARTS NO |
|---|---|---|
| X-1 | Crystal 11.275 MHz QX-014 | 133-010-9-001 |
| X-2 | Crystal 11.730 MHz QX-014 | 133-010-9-002 |
| X-3 | Crystal 14.950 MHz QX-015 | 133-010-9-003 |
| X-4 | Crystal 14.960 MHz QX-015 | 133-010-9-004 |
| X-5 | Crystal 14.970 MHz QX-015 | 133-010-9-005 |
| X-6 | Crystal 14.990 MHz QX-015 | 133-010-9-006 |
| X-7 | Crystal 23.290 MHz QX-016 | 133-010-9-007 |
| X-8 | Crystal 23.340 MHz QX-016 | 133-010-9-008 |
| X-9 | Crystal 23 390 MHz QX-016 | 133-010-9-009 |
| X-10 | Crystal 23 440 MHz QX-016 | 133-010-9-010 |
| X-11 | Crystal 23.490 MHz QX-016 | 133-010-9-011 |
| X-12 | Crystal 23 540 MHz QX-016 | 133-010-9-012 |

## MISCELLANEOUS

| CIRCUIT SYMBOL | DESCRIPTION | PARTS NO |
|---|---|---|
| MIKE | Microphone MK-025 | 562-008-9-001 |
| J-1 | Ext Speaker Jack JK-010 | 773-061-9-001 |
| J 2 | Microphone Connector JK-004 | 770-016-9-001 |
| J-3 | Ext Antenna Connector JK-035 | 772-027-9-001 |
| P | Microphone Plug PG-002 | 775-031-9-001 |
| SP | Speaker SP-022 | 580-016-9-001 |
| SK | Crystal Socket SK-010 | 749-089-9-001 |
| TP-1 3 5 | Terminal TP-011 | 345-041-9-001 |
| TP-2,4 6 | Terminal TP-001 | 345-041-9-002 |
| PL-1 | Pilot Lamp 14V 50mA Clear | 400-038-9-001 |
| FS- | Fuse FS-001 1.5 Amp | 191-002-9-001 |
| Z-1 | Wire Wrapping Band YY-001 | |
| | Printed Circuit Board PC-055AA | |
| | Metal Chassis | 257-063-9-001 |
| | Metal Cabinet (upper) | 272-103-9-001 |
| | Metal Cabinet (bottom) | 272-104-9-001 |
| | Heat-sink | 747-032-9-001 |
| | Heat-sink | 747-032-9-002 |
| | Mounting Bracket | 250-049-9-001 |
| | Microphone Hanger | 741-080-9-001 |
| | Front Panel | 255-122-9-001 |
| | Channel Disc | 380-235-9-001 |
| | Channel Knob | 751-121-9-001 |
| | Volume/Squelch Knob | 751-121-9-002 |
| | Lamp Holder (rubber) | 381-065-9-001 |
| | Front Plate | 600-025-9-001 |
| | Microphone Plate | 600-025-9-002 |
| | FCC Lable | 483-195-9-001 |
| | Serial No Seal | |
| | Warning Label | |
| | FCC I D. Card | |
| | Instruction Manual | 480-162-9-001 |
| | FCC Application Form | |
| | Warranty Card | |
| | Service Station Card | |
| | Schematic Diagram/Parts List | 499-075-9-001 |
| | Styrofoam Box (front) | 563-087-9-001 |
| | Styrofoam Box (back) | 503-087-9-002 |
| | Display Box | 500-254-9-001 |